onlinecomponents.com
THE ONLINE DISTRIBUTOR OF ELECTRONIC COMPONENTS

PACKAGE OUTLINE

BRIDGE

DB

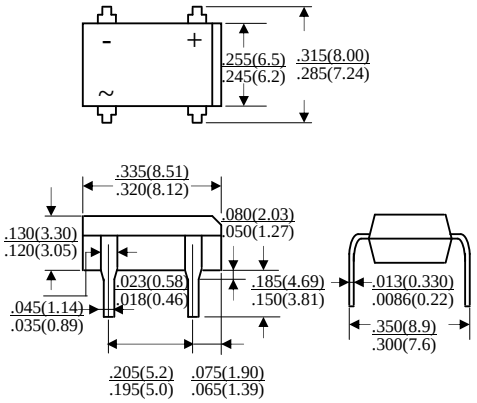

Dimensions in inches and (millimeters)

DBS

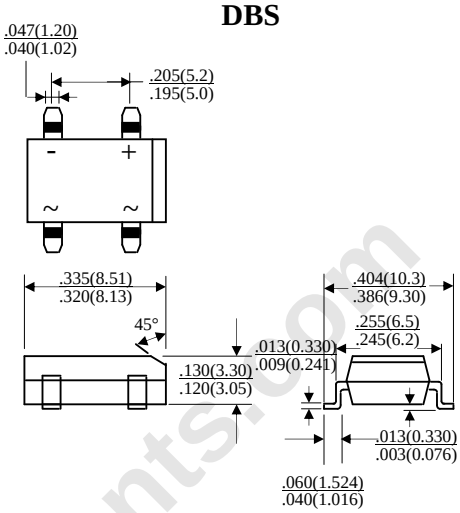

Dimensions in inches and (millimeters)

MDBS

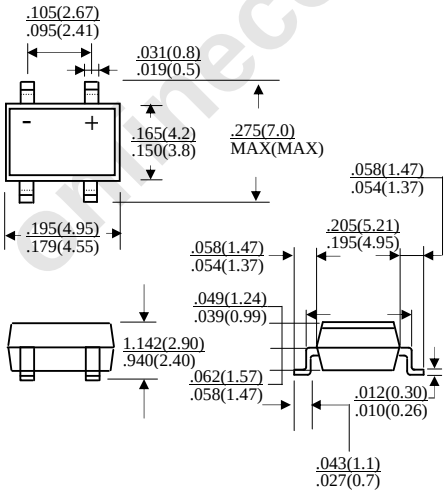

Dimensions in inches and (millimeters)

WOM

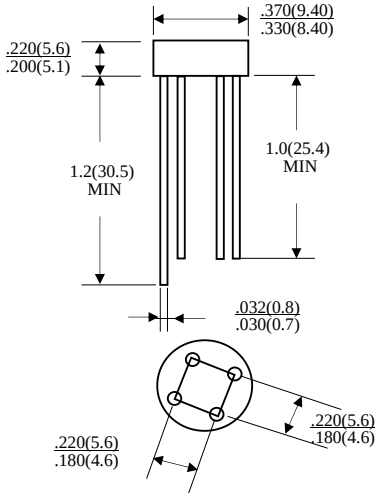

Dimensions in inches and (millimeters)

onlinecomponents.com