onlinecomponents.com
THE ONLINE DISTRIBUTOR OF ELECTRONIC COMPONENTS

PACKAGE OUTLINE

DO-9(DO--205AB)

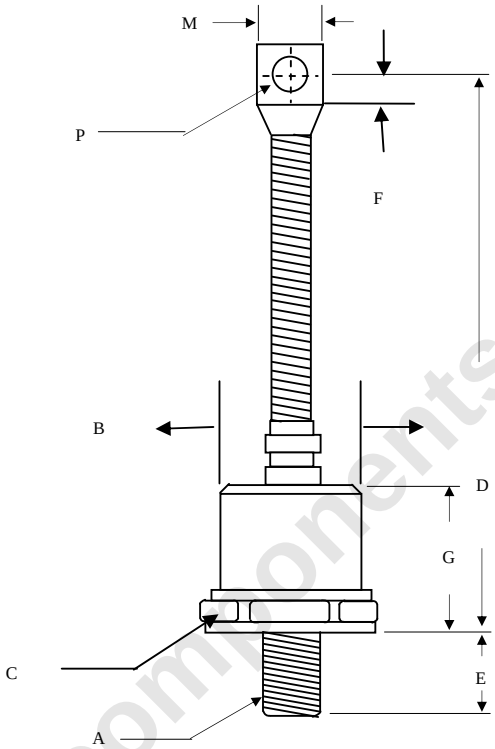

	Inches		Millimeters	
	Min	Max	Min	Max
A	3/4 –16 UNF			
B	-----	1.118	-----	28.40
C	1.244	1.256	31.61	31.90
D	-----	7.480	-----	190.00
E	0.793	0.828	20.14	21.03
F	0.276	-----	7.00	-----
G	-----	1.110	-----	28.20
J	-----	-----	-----	-----
K	-----	-----	-----	-----
M	-----	0.755	-----	19.17
N	-----	-----	-----	-----
P	0.309	0.319	7.85	8.10

Dimensions in inches and (millimeters)

onlinecomponents.com