onlinecomponents.com
THE ONLINE DISTRIBUTOR OF ELECTRONIC COMPONENTS

PACKAGE OUTLINE

BRIDGE

GBL

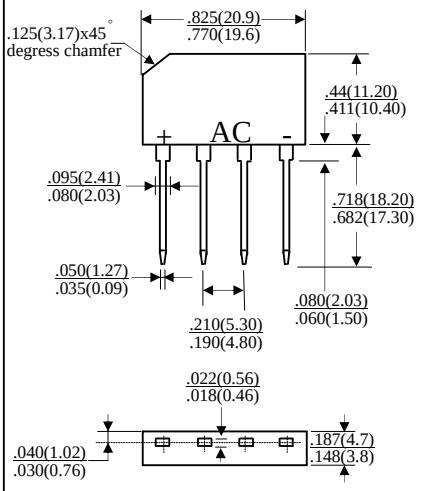

Dimensions in inches and (millimeters)

KBPM

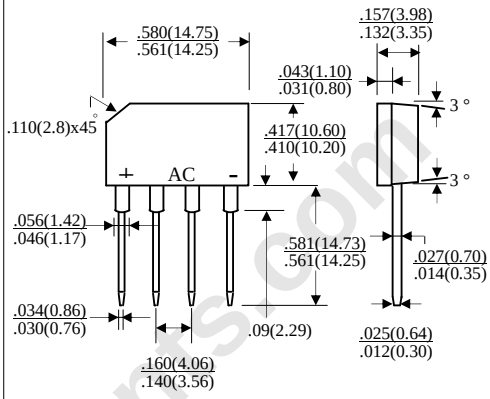

Dimensions in inches and (millimeters)

KBP

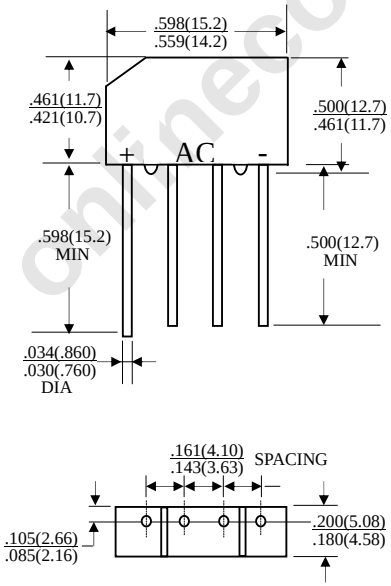

Dimensions in inches and (millimeters)

KBL

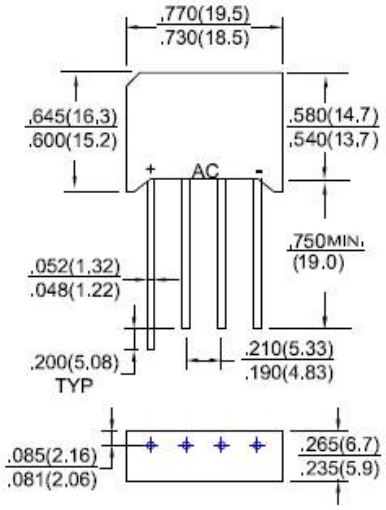

Dimensions in inches and (millimeters)

onlinecomponents.com