THIS COPY IS PROVIDED ON A RESTRICTED BASIS AND IS NOT TO BE USED IN ANY WAY DETRIMENTAL TO THE INTERESTS OF PANDUIT CORP.

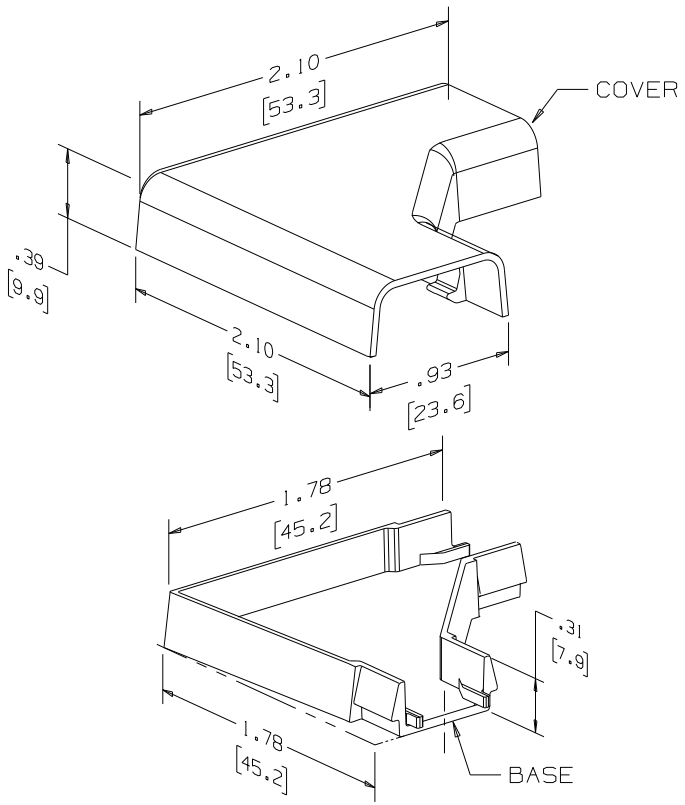

B

PANDUIT PART NUMBER	WEIGHT
PRAF3**	2.31 LB / 100 ASSEMBLIES (1052 g / 100 ASSEMBLIES)

A

NOTES:
1. SEE CURRENT CATALOG FOR ADDITIONAL PART NUMBER SUFFIXES TO INDICATE COLOR AND/OR PACKAGE QUANTITY.
2. THIS PRODUCT IS INTENDED TO BE USED WITH PANDUIT POWER DUCT (PD3) SURFACE RACEWAY.
3. COVER SNAPS ONTO BASE TO FORM COMPLETE ASSEMBLY.
4. NOMINAL WALL THICKNESSES:
   a. COVER = .065 (1.65)
   b. BASE = .050 (1.27)

DIMENSIONS IN PARENTHESIS ARE IN METRIC.

CAD FILENAME/LAYERS: WPC-PRAF3_CR01

PANDUIT CORP. TINLEY PARK, ILLINOIS

POWER RIGHT ANGLE FITTING ASSEMBLY (PRAF3)
CUSTOMER DRAWING

C

UNLESS OTHERWISE SPECIFIED, DIMENSIONAL TOLERANCES ARE:
(.X) ± (.XXX) ±.010(.3)
(.XX) ±.03(.8) ANGLES ±

UNLESS OTHERWISE SPECIFIED, ALL DIMENSIONS ARE GIVEN IN INCHES, THIRD ANGLE PROJECTION.

REV	DATE	BY	CHK	DESCRIPTION	ECN - R	CUST	SUP
---	------	---	---	D. CHANGED MAT'L FROM RIGID PVC TO ABS/PC C. ADDED CUSTOMER DRAWING TO TITLE BLOCK	------	---	---
1	02-28-97	RCA	CEF	B. REPLACED CHART A. REVISED NOTE 1	34067-18	CEF	CEF
R	10-11-90	DW	CEF	RELEASED TO PRODUCTION	34067-18	R	

DRAWN BY: DW
DATE: 06-27-90
CHK'D: CEF

MAT'L: ABS/PC

D

SCALE: NONE
DRAWING NO.: 34067-18
DWG SIZE: A